Flat (EPC Rating: C)

206 VALENCE CIRCUS, DAGENHAM, RM8 3LT

Offers over

£210,000

Green Lane Residential

Your personal estate agents with over 50 years experience

1 | 1 | 1 | C

1 Bedroom Flat located in Dagenham

Green Lane Residential are delighted to offer for sale this well-presented one-bedroom first floor flat with private rear garden and balcony access, ideally suited to first-time buyers and investors alike.

Located on the first floor, this property provides practical and well-planned accommodation, including a separate living room, a generous kitchen with access to a private balcony, a double bedroom, and a modern shower room. Double glazing and gas central heating ensure comfort and efficiency year-round. A particular highlight of the property is the combination of outdoor spaces.

In addition to the kitchen balcony, the flat also benefits from its own private rear garden, a rare and attractive feature for a first-floor apartment, providing excellent space for outdoor relaxation, gardening or entertaining.

Located in a popular and well-established residential area, the property is conveniently placed for access to local amenities, green spaces and transport links. Chadwell Heath station is approximately one mile away, offering excellent connections via the Elizabeth Line and making this a strong option for commuters and investors alike.

This is a fantastic opportunity to acquire a well-located flat with private outdoor space and strong rental appeal. Early viewing is highly recommended to fully appreciate the accommodation and features on offer.

GREEN LANE RESIDENTIAL | 551 GREEN LANE, ILFORD, LONDON, IG3 9RJ

Valence Circus RM8 3LT

Approximate Gross Internal Area = 51.9 sq m / 558 sq ft

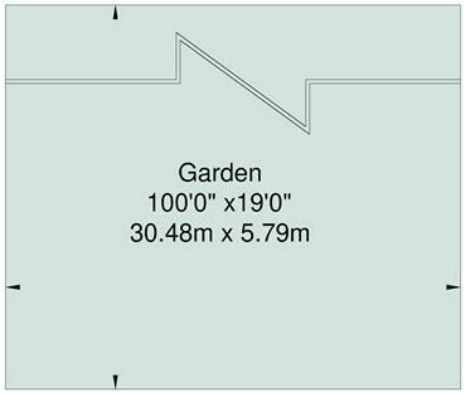

(Not Shown In Actual Location / Orientation)

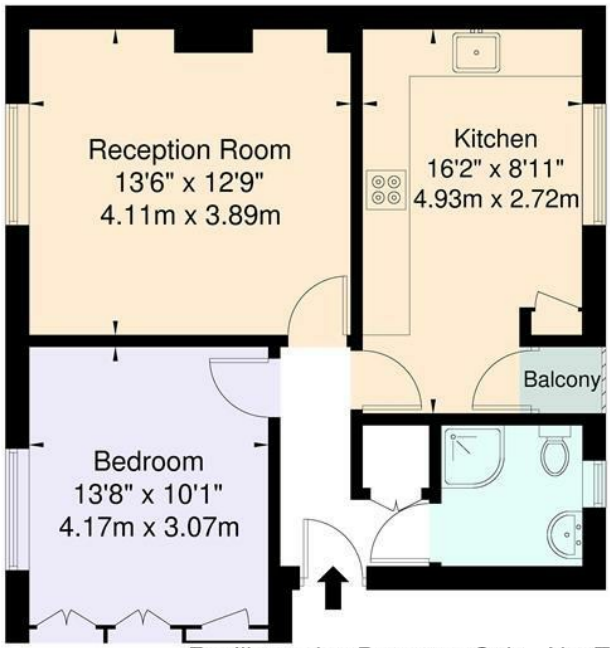

For Illustration Purposes Only - Not To Scale

This floor plan should be used as a general outline for guidance only and does not constitute in whole or in part an offer or contract.
Any intending purchaser or lessee should satisfy themselves by inspection, enquiries and full survey as to the correctness of each statement
Any areas, measurements or distances quoted are approximate and should not be used to value a property or be the basis of any sale or let

Council Tax Band

B

Energy Performance Graph

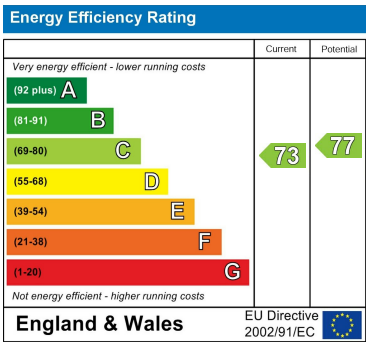

Call us on

02081293838

admin@greenlaneresidential.co.uk

greenlaneresidential.co.uk

Agents Note: Whilst every care has been taken to prepare these particulars, they are for guidance purposes only. All measurements are approximate and are for general guidance purposes only and whilst every care has been taken to ensure their accuracy, they should not be relied upon and potential buyers are advised to recheck the measurements.